**Farrat Isolevel Ltd**
Balmoral Road
Altrincham
Cheshire WA15 8HJ

Tel: (0)161 924 1600 Fax: (0)161 924 1616
e-mail: sales@farrat.com
website: www.farrat.com

**Agrément Certificate**
**17/5435**
Product Sheet 1

# FARRAT STRUCTURAL THERMAL BREAKS

# FARRAT TBF, FARRAT TBK AND FARRAT TBL STRUCTURAL THERMAL BREAKS

This Agrément Certificate Product Sheet [(1)] relates to Farrat TBF, Farrat TBK and Farrat TBL Structural Thermal Breaks, used to reduce thermal bridging between flanged connections of internal and external steelwork, or internal concrete and external steelwork.

(1) Hereinafter referred to as 'Certificate'.

**CERTIFICATION INCLUDES:**

- factors relating to compliance with Building Regulations where applicable
- factors relating to additional non-regulatory information where applicable
- independently verified technical specification
- assessment criteria and technical investigations
- design considerations
- installation guidance
- regular surveillance of production†
- formal three-yearly review.†

**KEY FACTORS ASSESSED**

**Structural aspects —** the products can be used in building constructions designed for static loading (see section 6).
**Behaviour in relation to fire —** the products will require the same fire resistance protection as the main structure. Farrat TBF is classified as Class A2-s1,d0 in accordance with BS EN 13501-1 : 2018 (see section 7).
**Hygrothermal performance —** the products contribute towards the overall thermal insulation of the building envelope by reducing thermal bridging between the internal and external elements (see section 8).
**Durability —** under normal service conditions, the products will have a service life equal to that of the building in which they are installed (see section 11).

The BBA has awarded this Certificate to the company named above for the products described herein. These products have been assessed by the BBA as being fit for their intended use provided they are installed, used and maintained as set out in this Certificate.

On behalf of the British Board of Agrément

Date of Second issue: 11 May 2021

Hardy Giesler
Chief Executive Officer

Originaly certificated on 28 June 2017
*Certificate amended on 18 September 2026 to update the accreditation status.*

*This Certificate is not issued under accreditation*
***Readers MUST check the validity and latest issue number of this Agrément Certificate by either referring to the BBA website or contacting the BBA directly.***
*Any photographs are for illustrative purposes only, do not constitute advice and should not be relied upon.*

**British Board of Agrément**
Bucknalls Lane
Watford
Herts WD25 9BA
tel: 01923 665300
clientservices@bbacerts.co.uk
**www.bbacerts.co.uk**
©2021

## Regulations

In the opinion of the BBA, Farrat TBF, Farrat TBK and Farrat TBL Structural Thermal Breaks, if installed, used and maintained in accordance with this Certificate, can satisfy or contribute to satisfying the relevant requirements of the following Building Regulations (the presence of a UK map indicates that the subject is related to the Building Regulations in the region or regions of the UK depicted):

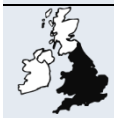

### The Building Regulations 2010 (England and Wales) (as amended)

| | | |
|---|---|---|
| **Requirement:** | **A1** | **Loading** |
| Comment: | | The products have sufficient strength to transmit the design loads in accordance with section 6 of this Certificate. |
| **Requirement:** | **B3(1)** | **Internal fire spread (structure)** |
| Comment: | | The products will require the same fire resistance protection as the steel structure. See section 7 of this Certificate. |
| **Requirement:** | **L1(a)(i)** | **Conservation of fuel and power** |
| Comment: | | The products can contribute to satisfying this Requirement. See section 8.1 of this Certificate. |
| **Regulation:** | **7(1)** | **Materials and workmanship** |
| Comment: | | The products are acceptable. See section 11 and the *Installation* part of this Certificate. |
| **Regulation:** | **7(2)** | **Materials and workmanship** |
| Comment: | | The products are unrestricted by this Regulation. See section 7 of this Certificate. |
| **Regulation:** | **26** | **$CO_2$ emission rates for new buildings** |
| **Regulation:** | **26A** | **Fabric energy efficiency rates for new dwellings (applicable to England only)** |
| **Regulation:** | **26A** | **Primary energy consumption rates for new buildings (applicable to Wales only)** |
| **Regulation:** | **26B** | **Fabric performance values for new dwellings (applicable to Wales only)** |
| Comment: | | The products can contribute to a building satisfying these Regulations; however, compensating fabric/services measures may be required. See section 8.1 of this Certificate. |

### The Building (Scotland) Regulations 2004 (as amended)

| | | |
|---|---|---|
| **Regulation:** | **8(1)** | **Durability, workmanship and fitness of materials** |
| Comment: | | The products are acceptable. See sections 10 and 11 and the *Installation* part of this Certificate. |
| **Regulation:** | **9** | **Building standards applicable to construction** |
| Standard: | 1.1(a)(b) | Structure |
| Comment: | | A structure incorporating the products has sufficient strength and stiffness to sustain and transmit the design loads in accordance with section 6 of this Certificate, with reference to clauses 1.1.1[(1)(2)], 1.1.2[(1)(2)], 1.1.3[(1)(2)] and 1.1.5[(1)(2)] of this Standard. |
| Standard: | 2.3 | Structural protection |
| Comment: | | The products will require the same fire resistance protection as the steel structure and can contribute to satisfying this Standard, with reference to clauses 2.3.1[(1)(2)] and 2.3.2[(1)(2)]. See section 7 of this Certificate. |
| Standard: | 6.1(b) | Carbon dioxide emissions |
| Comment: | | The products, when used in conjunction with additional insulation, can contribute to satisfying this Standard, with reference to clauses 6.1.1[(1)], 6.1.2[(2)] and 6.1.6[(1)]. See section 8.1 of this Certificate. |

| | | |
|---|---|---|
| Standard: | 6.2 | Building insulation envelope |
| Comment: | | The products can contribute to satisfying this Standard, with reference to clauses 6.2.3[(1)], 6.2.5[(2)], 6.2.10[(1)] and 6.2.12[(2)]. See section 8.1 of this Certificate. |
| Standard: | 7.1(a)(b) | Statement of sustainability |
| Comment: | | The products can contribute to satisfying the relevant requirements of Regulation 9, Standards 1 to 6, and therefore will contribute to a construction meeting a bronze level of sustainability as defined in this Standard. See section 8.1 of this Certificate. |
| **Regulation:** | **12** | **Building standards applicable to conversions** |
| Comment: | | All comments given for the products under Regulation 9, Standards 1 to 6, also apply to this Regulation, with reference to clause 0.12.1[(1)(2)] and Schedule 6[(1)(2)]. |
| | | (1) Technical Handbook (Domestic).<br>(2) Technical Handbook (Non-Domestic). |

## The Building Regulations (Northern Ireland) 2012 (as amended)

| | | |
|---|---|---|
| **Regulation:** | **23** | **Fitness of materials and workmanship** |
| Comment: | | The products are acceptable. See section 11 and the *Installation* part of this Certificate. |
| **Regulation:** | **30** | **Stability** |
| Comment: | | The products have sufficient strength and stiffness to sustain and transmit the design loads in accordance with section 6 of this Certificate. |
| **Regulation:** | **35** | **Internal fire spread — structure** |
| Comment: | | The products will require the same fire resistance protection as the steel structure. See section 7 of this Certificate. |
| **Regulation:** | **39(a)(i)** | **Conservation measures** |
| **Regulation:** | **40(2)** | **Target carbon dioxide emission rate** |
| Comment: | | The products can contribute to a building satisfying these Regulations; however, compensating fabric/services measures may be required. See section 8.1 of this Certificate. |

## Construction (Design and Management) Regulations 2015
## Construction (Design and Management) Regulations (Northern Ireland) 2016

Information in this Certificate may assist the client, designer (including Principal Designer) and contractor (including Principal Contractor) to address their obligations under these Regulations.

See section: 3 *Delivery and site handling* (3.2 and 3.3) of this Certificate.

# Additional Information

## NHBC Standards 2021

In the opinion of the BBA, Farrat TBF, Farrat TBK and Farrat TBL Structural Thermal Breaks, if installed, used and maintained in accordance with this Certificate, in relation to *NHBC Standards*, Chapter 7.1 *Flat roofs, terraces and balconies*.

# Technical Specification

## 1 Description

1.1 Farrat TBF, Farrat TBK and Farrat TBL Structural Thermal Breaks are synthetic, structural thermal break plates as follows:

- Farrat TBF: inorganic mineral composite

- Farrat TBK: a glass-fibre laminate, bound with a high-temperature polymer resin laminate
- Farrat TBL: modified polyamide thermoplastic

1.2 The products' characteristics and the available thicknesses are shown in Table 1.

*Table 1 Product characteristics*

| Product | Thickness (mm) | Material density ($kg.m^{-3}$) | Colour | Thermal conductivity λ ($W.m^{-1}.K^{-1}$) |
|---|---|---|---|---|
| Farrat TBF | 5, 10, 15, 20, 25 | 2160 | Grey | 0.20 |
| Farrat TBK | 5, 10, 15, 20, 25 | 1465 | Amber | 0.19 |
| Farrat TBL | 5, 10, 15, 20, 25 | 1137 | Black | 0.29 |

1.3 Items to be used with the products but outside the scope of this Certificate are:

- structural supporting elements — steelwork, concrete etc
- stainless steel bolts.

1.4 The bespoke thermal breaks are manufactured from the fabrication drawings to suit the application. Typical detail of a TBK thermal break plate is shown in Figure 1.

*Figure 1 Farrat TBK plate – steel to steel connection*

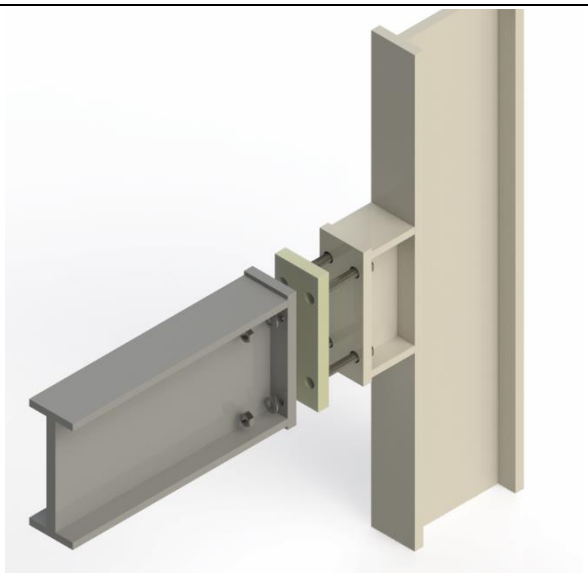

## 2 Manufacture

2.1 Farrat TBF thermal breaks are inorganic hybrid mineral layers, high pressure bonded to form solid sheets. Farrat TBK thermal breaks are manufactured by blending glass fibre and resin components and applying pressure/heat to form laminated sheets. Farrat TBL thermal breaks are formed by a batch blending process of the constituent components, followed by moulding and extrusion into sheets.

2.2 The thermal breaks are precision cut from the respective sheet materials using Computer Numerical Control (CNC) machining.

2.3 As part of the assessment and ongoing surveillance of product quality, the BBA has:

- agreed with the manufacturer the quality control procedures and product testing to be undertaken
- assessed and agreed the quality control operated over batches of incoming materials
- monitored the production process and verified that it is in accordance with the documented process
- evaluated the process for management of nonconformities
- checked that equipment has been properly tested and calibrated

- undertaken to carry out the above measures on a regular basis through a surveillance process, to verify that the specifications and quality control operated by the manufacturer are being maintained.

2.4 The management system of Farrat Isolevel Ltd has been assessed and registered as meeting the requirements of BS EN ISO 9001 : 2015 by TUV Nord (Certificate GB 00495).

## 3 Delivery and site handling

3.1 Each thermal break plate has a label bearing the Certificate holder's details, the BBA Certificate number, the material type and thickness and, when available, the customer's drawing reference. All consignments have a delivery note attached to the outside and branded tape applied around the packaging to assist with identification.

3.2 Depending on the order size, the thermal break plates will be supplied either boxed or palleted. In the case of palleted deliveries, they will be protected by board and shrink-wrapped.

3.3 During off-loading, care must be taken to avoid damage to the packaging. Prior to installation, the products must be stored under cover in a clean and dry environment away from direct sunlight, solvents or other harmful chemicals. Any damaged products should not be used.

# Assessment and Technical Investigations

The following is a summary of the assessment and technical investigations carried out on Farrat TBF, Farrat TBK and Farrat TBL Structural Thermal Breaks.

# Design Considerations

## 4 Use

Farrat TBF, Farrat TBK and Farrat TBL Structural Thermal Breaks are satisfactory for use within the insulation zone/layer to reduce the thermal bridging (ie by reducing thermal transmittance through the connection) between flanged connections of internal and external steelwork, or internal concrete and external steelwork. They are suitable for use in the following applications[(1)] (see Figure 2) in new-build and refurbishment projects:

- balconies
- façade system connections
- brise-soleil and canopies
- external access systems (staircases, balustrading, etc)
- roof plant room super-structure (columns)
- connections between new and existing construction
- Building Maintenance Units (BMU).

(1) The specific design of these applications is outside the scope of this Certificate.

*Figure 2 Typical example applications of Farrat TBF, Farrat TBK and Farrat TBL Structural Thermal Breaks*

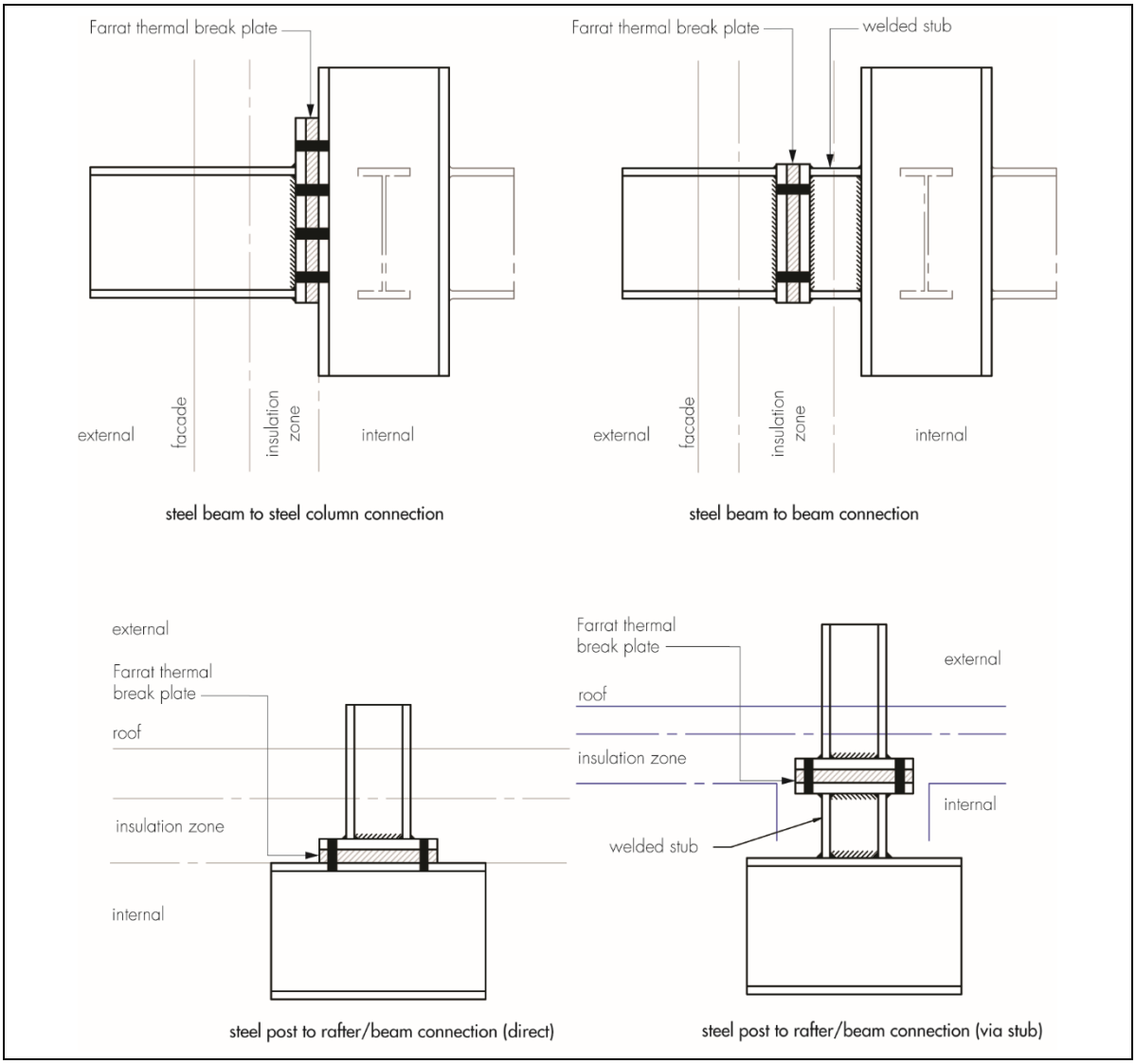


## 5 Practicability of installation

The products are designed to be installed by competent operatives in accordance with the Certificate holder's instructions and the requirements of this Certificate.

## 6 Structural aspects

6.1 The thermal breaks can be used for the building construction applications designed for static loading, as specified in section 4 of this Certificate.

6.2 The elastic modulus, characteristic compressive strength (*f*ck) and design compressive strength (*f*cd) for the products are listed in Table 2.

*Table 2 Structural characteristics*

| Product type | Characteristic compressive strength, *f*ck[1] (N.mm$^{-2}$) | Design compressive strength, *f*cd[2] (N.mm$^{-2}$) | Elastic modulus (N.mm$^{-2}$) |
|---|---|---|---|
| Farrat TBF | 355 | 284 | 5326 |
| Farrat TBK | 312 | 250 | 5178 |
| Farrat TBL | 89 | 70 | 2586 |

(1) Characteristic compressive strength (*f*ck) has been calculated in accordance with BS EN 1990 : 2002.
(2) A partial safety factor of 1.25 for joints has been applied in accordance with BS EN 1993-1-8 : 2005 and its National Annex.

6.3 The Farrat thermal break materials exhibit levels of initial creep behaviour; therefore, when considering any possible additional rotation due to compression of the thermal break plates, the designer should include an allowance for long term creep, as follows:

- for Farrat TBF, increase deformation by 20%
- for Farrat TBK, increase deformation by 20%
- for Farrat TBL, increase deformation by 30%.

6.4 The thermal break plate does not contribute to shear resistance but introduces bending on the bolts by virtue of the gap created. Therefore, a thermal break plate in a connection must be considered as a 'pack' in terms of connection design. Where packs are used in connections, and depending on the thickness of the packs, it may be necessary to reduce the shear resistance of the bolts within the connection in accordance with BS EN 1993-1-8 : 2005.

6.5 Assessment of structural performance for individual installations of connections that include thermal break plates should be carried out by a suitably experienced and qualified engineer and designed in accordance with BS EN 1993-1-8 : 2005 and the Steel Construction Institute (SCI) industry guidance. The engineer should confirm that:

- the thermal break plate can resist the applied compression forces
- any additional rotation due to the compression of the thermal break plate (including allowance for long term creep) is adequate
- the shear resistance of the bolts is acceptable, given that there may be a reduction in resistance due to packs and large grip lengths
- for non pre-loaded bolt systems, the shear resistance of the bolts is adequate.

## 7 Behaviour in relation to fire

7.1 Farrat TBF is classified as Class A2-s1,d0 in accordance with BS EN 13501-1 : 2018. The Certificate holder has not declared a reaction to fire classification to BS EN 13501-1 : 2018 for Farrat TBK and Farrat TBL.

7.2 When properly installed, the products will not add significantly to any existing fire hazard as they will be contained within the building envelope. The products will require the same fire resistance protection as the steel elements to which they are connected.

## 8 Hygrothermal performance

8.1 The linear thermal transmittance psi (ψ) value of a junction incorporating the products, and the minimum temperature factors, should be determined in accordance with BS EN ISO 10211 : 2007 and BRE Report BR 497 : 2007, using the dimensions of the components and values for the thermal conductivity ($W \cdot m^{-1} \cdot K^{-1}$) of:

- Farrat TBF — 0.20
- Farrat TBK — 0.19
- Farrat TBL — 0.29

8.2 The effect of thermal bridging at the junction between steel to steel, or steel to concrete/masonry, must be minimised. The performance of this junction will be dependent upon other elements not covered by this Certificate, and a suitable assessment of all junction details should be carried out.

## 9 Water absorption

Farrat TBF, Farrat TBK and Farrat TBL thermal breaks have a water absorption volume of 0.40%, 0.14% and 0.48% respectively, in accordance with BS EN 12087 : 2013.

## 10 Maintenance

Once properly installed within the structure, the products have suitable durability (see section 11) and should not require maintenance throughout their serviceable life.

## 11 Durability

Thermal break plates are contained within the protective envelope of the building and will remain effective as thermal break material for the life of the building in which they are incorporated.

# Installation

## 12 General

12.1 Installation must be in accordance with industry guidance, eg the Eurocodes, the National Structural Steel Specification (NSSS) and the National Structural Concrete Specification (NSCS).

12.2 Farrat TBF, Farrat TBK and Farrat TBL Structural Thermal Breaks must be installed in accordance with the Certificate holder's recommendations, the requirements of this Certificate and the specifications laid down by a suitably qualified and experienced engineer.

12.3 The steel end plates to which the thermal break will be connected must be inspected to ensure there are no irregularities and that they are free from dirt or contaminants.

12.4 One of the end plates can be simply held on one side of the assembly by the bolts until the other end plate is located. The bolts can then be loosely tightened prior to alignment and, following this, can be torqued to an appropriate level.

12.5 After installation, the structural thermal break plate should be protected from the environment and the risk of site damage until the cladding and/or finishes have been completed.

## 13 Tests and Investigations

13.1 An assessment was made of test data relating to:

- compressive strength
- long term creep
- density
- elasticity modulus
- thermal conductivity
- water absorption
- effect of temperature/thermal movement.

13.2 The manufacturing process was evaluated, including the methods adopted for quality control, and details were obtained of the quality and composition of the materials used.

## Bibliography

BRE Report BR 497 : 2007 *Conventions for Calculating Linear thermal transmittance and Temperature Factors*

BS EN 1990 : 2002 + A1 : 2005 *Eurocode — Basis of structural design*

BS EN 1993-1-8 : 2005 *Eurocode 3 — Design of steel structures — Design of joints*
NA to BS EN 1993-1-8 : 2005 UK National Annex to *Eurocode 3 — Design of steel structures —Design of joints*

BS EN 12087 : 2013 *Thermal insulating products for building applications — Determination of long term water absorption by immersion*

BS EN 13501-1 : 2018 *Fire classification of construction products and building elements — Classification using test data from reaction to fire tests*

BS EN ISO 9001 : 2015 *Quality management systems — Requirements*

BS EN ISO 10211 : 2007 *Thermal bridges in building construction — Heat flows and surface temperatures — Detailed calculations*

## Conditions of Certificate

### Conditions

1. This Certificate:

- relates only to the product that is named and described on the front page
- is issued only to the company, firm, organisation or person named on the front page – no other company, firm, organisation or person may hold or claim that this Certificate has been issued to them
- is valid only within the UK
- has to be read, considered and used as a whole document – it may be misleading and will be incomplete to be selective
- is copyright of the BBA
- is subject to English Law.

2. Publications, documents, specifications, legislation, regulations, standards and the like referenced in this Certificate are those that were current and/or deemed relevant by the BBA at the date of issue or reissue of this Certificate.

3 This Certificate will be displayed on the BBA website, and the Certificate Holder is entitled to use the Certificate and Certificate logo, provided that the product and its manufacture and/or fabrication, including all related and relevant parts and processes thereof:

- are maintained at or above the levels which have been assessed and found to be satisfactory by the BBA
- continue to be checked as and when deemed appropriate by the BBA under arrangements that it will determine
- are reviewed by the BBA as and when it considers appropriate.

4. The BBA has used due skill, care and diligence in preparing this Certificate, but no warranty is provided.

5. In issuing this Certificate the BBA is not responsible and is excluded from any liability to any company, firm, organisation or person, for any matters arising directly or indirectly from:

- the presence or absence of any patent, intellectual property or similar rights subsisting in the product or any other product
- the right of the Certificate holder to manufacture, supply, install, maintain or market the product
- actual installations of the product, including their nature, design, methods, performance, workmanship and maintenance
- any works and constructions in which the product is installed, including their nature, design, methods, performance, workmanship and maintenance
- any loss or damage, including personal injury, howsoever caused by the product, including its manufacture, supply, installation, use, maintenance and removal
- any claims by the manufacturer relating to UKCA, UKNI or CE marking.

6. Any information relating to the manufacture, supply, installation, use, maintenance and removal of this product which is contained or referred to in this Certificate is the minimum required to be met when the product is manufactured, supplied, installed, used, maintained and removed. It does not purport in any way to restate the requirements of the Health and Safety at Work etc. Act 1974, or of any other statutory, common law or other duty which may exist at the date of issue or reissue of this Certificate; nor is conformity with such information to be taken as satisfying the requirements of the 1974 Act or of any statutory, common law or other duty of care.

**British Board of Agrément**
1st Floor, Building 3, Hatters Lane
Croxley Park, Watford
Herts WD18 8YG
tel: 01923 665300
clientservices@bbacerts.co.uk
**www.bbacerts.co.uk**
©2024